SMITH® JAY R. SMITH MFG. CO.®
MEMBER OF MORRIS GROUP INTERNATIONAL
POST OFFICE BOX 3237
MONTGOMERY, ALABAMA 36109-0237 (USA)
TEL: 334-277-8520 FAX: 334-272-7396 www.jrsmith.com

CUSTOMER DRIVEN SINCE 1926

MEMBER OF:

LOCATION

FLOOR OR SHOWER DRAIN WITH FormIt® DRAIN INSTALLATION DEVICE

Load Rating: Light Duty having a Safe Live load less than 2,000 lbs. (900 kg) per ASME A112.6.3 Floor Drain Standard.
For the specific Safe Live Load rating of any grate, contact the Smith representative or factory direct.

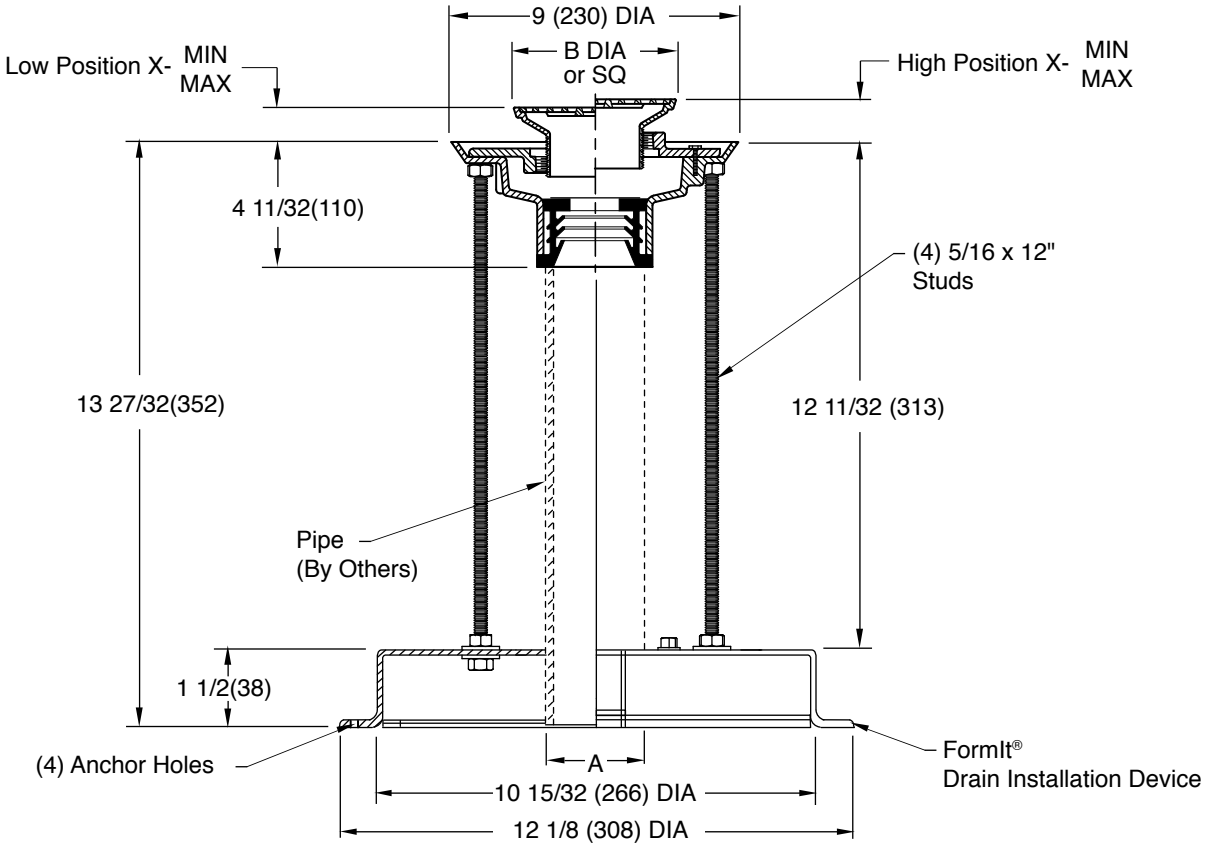

☐ Fig. 2038L.....(A) Round Top
☐ Fig. 2038L.....(B) Square Top

Outlet Size	Nickel Bronze Strainer Head
▲ 02(50)	05(125) DIA or SQ
▲ 03(75)	06(150) DIA or SQ
▲ 04(100)	08(205) DIA or SQ

Strainer Size	*Collar In High Position		*Collar In Low Position		Free Area SQ IN (SQ CM)	
B	X		XX			
DIA or SQ	MIN	MAX	MIN	MAX	ROUND	SQUARE
05 (125)	1 1/4 (32)	2 1/4 (57)	3/4 (19)	1 5/8 (41)	7 (45)	6.5 (42)
06 (150)	1 1/4 (32)	2 1/4 (57)	3/4 (19)	1 5/8 (41)	9 (58)	12.5 (81)
07 (180)	1 1/4 (32)	2 1/4 (57)	7/8 (22)	1 7/8 (48)	14 (90)	11 (71)
08 (205)	1 1/2 (38)	2 1/2 (64)	1 (25)	1 7/8 (48)	17 (110)	14 (90)
•09 (230)	1 1/2 (38)	2 3/8 (60)	1 (25)	1 7/8 (48)	18 (116)	16 (103)
•10 (255)	1 1/2 (38)	2 3/8 (60)	1 (25)	1 7/8 (48)	23 (148)	16 (103)

REGULARLY FURNISHED:

Duco Cast Iron Body with Speedi-Set Outlet and Adjustable Strainer Head (as specified) with FormIt® Drain Installation Device and Hardware.

▲ **Meets ANSI Spec A112.6.3-2001 02(50), 03(75) or 04"(100) sizes only.**

NOTE: Dimensions shown in parentheses are in millimeters.

VARIATIONS:

☐ Flapper Type Backwater Valve -V
☐ Hinged Grate -H
☐ Sediment Bucket -B
☐ Trap Primer Connection -P050 1/2" (13) & -P075 3/4" (19)
☐ Vandal Proof Screws -U
☐ T Threaded Outlet

OPTIONAL MATERIALS:

☐ Bronze Body -BB
☐ Chrome Plated Strainer -CP
☐ Galvanized Cast Iron Body -G
☐ Nickel Bronze Strainer -NB
☐ Polished Bronze Strainer -PB
☐ Stainless Steel Body and Strainer Head -SS

REV.	DATE	DESCRIPTION	BY	CKD. BY
E	7-19-19	Added Load Rating	MW	JM
D	6-17-19	Removed Function	MW	JM
C	9-27-18	Revised Title	TBW	CL
B	7-7-10	Revised ™ to ®	RN	BW

WEIGHT POUNDS

VOLUME CUBIC FEET

FIGURE NUMBER **2038**

FIGURE NUMBER 2038 | DRAWING NUMBER s2038 | SIZE A | SCALE: NONE | DATE: 8-27-08 | APPROVED BY: BW | CHECKED BY: BW | DRAWN BY: RN | E

DIMENSIONS ARE SUBJECT TO MANUFACTURERS TOLERANCE AND CHANGE WITHOUT NOTICE

WE CAN ASSUME NO RESPONSIBILITY FOR USE OF SUPERSEDED OR VOID DATA

WARNING: Cancer and Reproductive Harm - www.P65Warnings.ca.gov